Cree® XLamp® XP-E LEDs
Data Sheet

The XLamp XP-E LED combines the proven lighting-class performance and reliability of the XLamp XR-E LED in a package with 80% smaller footprint. The XLamp XP-E LED continues Cree's history of innovation in LEDs for lighting applications with wide viewing angle, symmetrical package, unlimited floor life and electrically neutral thermal path.

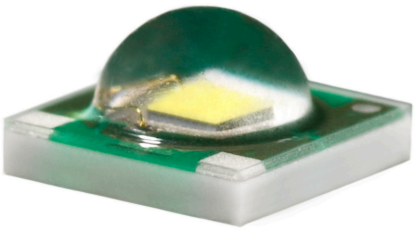

Cree XLamp LEDs bring high performance and quality of light to a wide range of lighting applications, including color-changing, portable and personal, outdoor, indoor-directional, transportation, stage and studio, commercial and emergency-vehicle lighting.

FEATURES

- Available in white (2,600 K to 10,000 K CCT), blue, green, amber, red & red-orange
- Maximum drive current: up to 1 A
- Low thermal resistance: as low as 9°C/W
- Maximum junction temperature: 150°C
- Wide viewing angle: 115°–130°
- Unlimited floor life at ≤ 30°C/85% RH
- Reflow solderable - JEDEC J-STD-020C compatible
- Electrically neutral thermal path
- RoHS-compliant

Table of Contents

Flux Characteristics (T_J = 25°C) - White 2
Flux Characteristics (T_J = 25°C) - Color 3
Characteristics 5
Relative Spectral Power Distribution 6
Relative Flux vs. Junction Temperature (I_F = 350 mA) 7
Electrical Characteristics (T_J = 25°C) 8
Thermal Design 9
Relative Flux vs. Current (T_J = 25°C) 11
Typical Spatial Distribution 12
Reflow Soldering Characteristics 13
Notes 14
Mechanical Dimensions (T_A = 25°C) 15
Tape and Reel 16
Packaging 17

Data Sheet: CLD-DS18.005

Flux Characteristics (T_J = 25°C) - White

The following table provides several base order codes for XLamp XP-E LEDs. It is important to note that the base order codes listed here are a subset of the total available order codes for the product family. For more order codes, as well as a complete description of the order-code nomenclature, please consult the XP-E & XP-C Binning and Labeling document.

Color	CCT Range		Base Order Codes Min Luminous Flux (lm)		Order Code
	Min.	Max.	Group	Flux (lm)	
Cool White	5,000 K	10,000 K	Q3	93.9	XPEWHT-L1-0000-00B01
			Q4	100	XPEWHT-L1-0000-00C01
			Q5	107	XPEWHT-L1-0000-00D01
			R2	114	XPEWHT-L1-0000-00E01
Neutral White	3,700 K	5,000 K	P4	80.6	XPEWHT-L1-0000-009E4
			Q2	87.4	XPEWHT-L1-0000-00AE4
			Q3	93.9	XPEWHT-L1-0000-00BE4
			Q4	100	XPEWHT-L1-0000-00CE4
Warm White	2,600 K	3,700 K	P2	67.2	XPEWHT-L1-0000-007E7
			P3	73.9	XPEWHT-L1-0000-008E7
			P4	80.6	XPEWHT-L1-0000-009E7
			Q2	87.4	XPEWHT-L1-0000-00AE7

Notes:
- Cree maintains a tolerance of +/- 7% on flux and power measurements.
- Typical CRI for Cool White & Neutral White (3,700 K – 10,000 K CCT) is 75.
- Typical CRI for Warm White (2,600 K – 3,700 K CCT) is 80.

Copyright © 2008-2009 Cree, Inc. All rights reserved. The information in this document is subject to change without notice. Cree, the Cree logo and XLamp are registered trademarks of Cree, Inc.

Cree, Inc.
4600 Silicon Drive
Durham, NC 27703
USA Tel: +1.919.313.5300
www.cree.com/xlamp

Flux Characteristics (T_J = 25°C) - Color

The following table provides several base order codes for XLamp XP-E LEDs. It is important to note that the base order codes listed here are a subset of the total available order codes for the product family. For more order codes, as well as a complete description of the order-code nomenclature, please consult the XP-E & XP-C Binning and Labeling document.

Color	Dominant Wavelength Range				Base Order Codes Min Luminous Flux (lm)		Order Code
	Min.		Max.				
	Group	DWL (nm)	Group	DWL (nm)	Group	Flux (lm)	
Blue	B3	465	B6	485	J	23.5	XPEBLU-L1-0000-00W01
					K2	30.6	XPEBLU-L1-0000-00Y01

Color	Dominant Wavelength Range				Base Order Codes Min Luminous Flux (lm)		Order Code
	Min.		Max.				
	Group	DWL (nm)	Group	DWL (nm)	Group	Flux (lm)	
Green	G2	520	G4	535	P2	67.2	XPEGRN-L1-0000-00701
					P3	73.9	XPEGRN-L1-0000-00801
					P4	80.6	XPEGRN-L1-0000-00901
					Q2	87.4	XPEGRN-L1-0000-00A01
					Q3	93.9	XPEGRN-L1-0000-00B01
					Q4	100	XPEGRN-L1-0000-00C01

Color	Dominant Wavelength Range				Base Order Codes Min Luminous Flux (lm)		Order Code
	Min.		Max.				
	Group	DWL (nm)	Group	DWL (nm)	Group	Flux (lm)	
Amber	A2	585	A3	595	K3	35.2	XPEAMB-L1-0000-00Z01
					M2	39.8	XPEAMB-L1-0000-00201
					M3	45.7	XPEAMB-L1-0000-00301
					N2	51.7	XPEAMB-L1-0000-00401

Copyright © 2008-2009 Cree, Inc. All rights reserved. The information in this document is subject to change without notice. Cree, the Cree logo and XLamp are registered trademarks of Cree, Inc.

Cree, Inc.
4600 Silicon Drive
Durham, NC 27703
USA Tel: +1.919.313.5300
www.cree.com/xlamp

Flux Characteristics (T_J = 25°C) - Color (continued)

Color	Dominant Wavelength Range				Base Order Codes Min Luminous Flux (lm)		Order Code
	Min.		Max.				
	Group	DWL (nm)	Group	DWL (nm)	Group	Flux (lm)	
Red-Orange	O3	610	O4	620	M3	45.7	XPERDO-L1-0000-00301
					N2	51.7	XPERDO-L1-0000-00401
					N3	56.8	XPERDO-L1-0000-00501
					N4	62.0	XPERDO-L1-0000-00601
					P2	67.2	XPERDO-L1-0000-00701

Color	Dominant Wavelength Range				Base Order Codes Min Luminous Flux (lm)		Order Code
	Min.		Max.				
	Group	DWL (nm)	Group	DWL (nm)	Group	Flux (lm)	
Red	R2	620	R3	630	K3	35.2	XPERED-L1-0000-00Z01
					M2	39.8	XPERED-L1-0000-00201
					M3	45.7	XPERED-L1-0000-00301
					N2	51.7	XPERED-L1-0000-00401

Note: Cree maintains a tolerance of +/- 7% on flux and power measurements.

Copyright © 2008-2009 Cree, Inc. All rights reserved. The information in this document is subject to change without notice. Cree, the Cree logo and XLamp are registered trademarks of Cree, Inc.

Cree, Inc.
4600 Silicon Drive
Durham, NC 27703
USA Tel: +1.919.313.5300
www.cree.com/xlamp

Characteristics

Characteristics	Unit	Minimum	Typical	Maximum
Thermal Resistance, junction to solder point - white, blue	°C/W		9	
Thermal Resistance, junction to solder point - green	°C/W		15	
Thermal Resistance, junction to solder point - amber, red, red-orange	°C/W		10	
Viewing Angle (FWHM) - white	degrees		115	
Viewing Angle (FWHM) - blue, green, red, red-orange, amber	degrees		130	
Temperature coefficient of voltage - white	mV/°C		-4.0	
Temperature coefficient of voltage - blue	mV/°C		-3.3	
Temperature coefficient of voltage - green	mV/°C		-3.8	
Temperature coefficient of voltage - red-orange, red	mV/°C		-1.8	
Temperature coefficient of voltage - amber	mV/°C		-1.2	
ESD Classification (HBM per Mil-Std-883D)			Class 2	
DC Forward Current - blue, green	mA			1000
DC Forward Current - red-orange, red, white	mA			700
DC Forward Current - amber	mA			500
Reverse Voltage	V			5
Forward Voltage (@ 350 mA) - blue, white	V		3.2	3.9
Forward voltage (@ 350 mA) - green	V		3.4	3.9
Forward voltage (@ 350 mA) - red-orange, red, amber	V		2.1	2.5
Forward voltage (@ 500 mA) - amber	V		2.3	
Forward voltage (@ 700 mA) - white	V		3.4	
Forward voltage (@ 700 mA) - red-orange, red	V		2.3	
Forward Voltage (@ 1000 mA) - green	V		3.8	
Forward Voltage (@ 1000 mA) - blue	V		3.5	
LED Junction Temperature	°C			150

Copyright © 2008-2009 Cree, Inc. All rights reserved. The information in this document is subject to change without notice. Cree, the Cree logo and XLamp are registered trademarks of Cree, Inc.

Cree, Inc.
4600 Silicon Drive
Durham, NC 27703
USA Tel: +1.919.313.5300
www.cree.com/xlamp

Relative Spectral Power Distribution

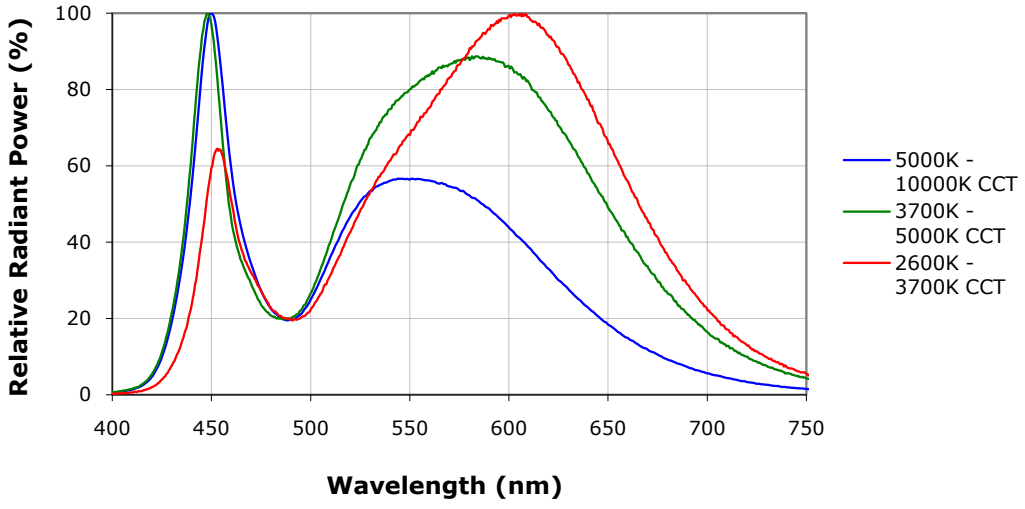

White

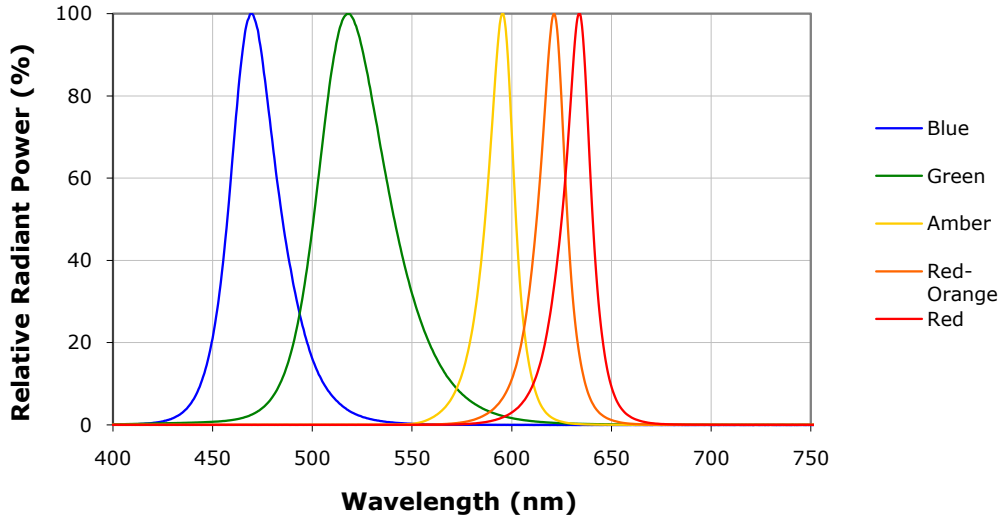

Color

Copyright © 2008-2009 Cree, Inc. All rights reserved. The information in this document is subject to change without notice. Cree, the Cree logo and XLamp are registered trademarks of Cree, Inc.

Cree, Inc.
4600 Silicon Drive
Durham, NC 27703
USA Tel: +1.919.313.5300
www.cree.com/xlamp

Relative Flux vs. Junction Temperature (I_F = 350 mA)

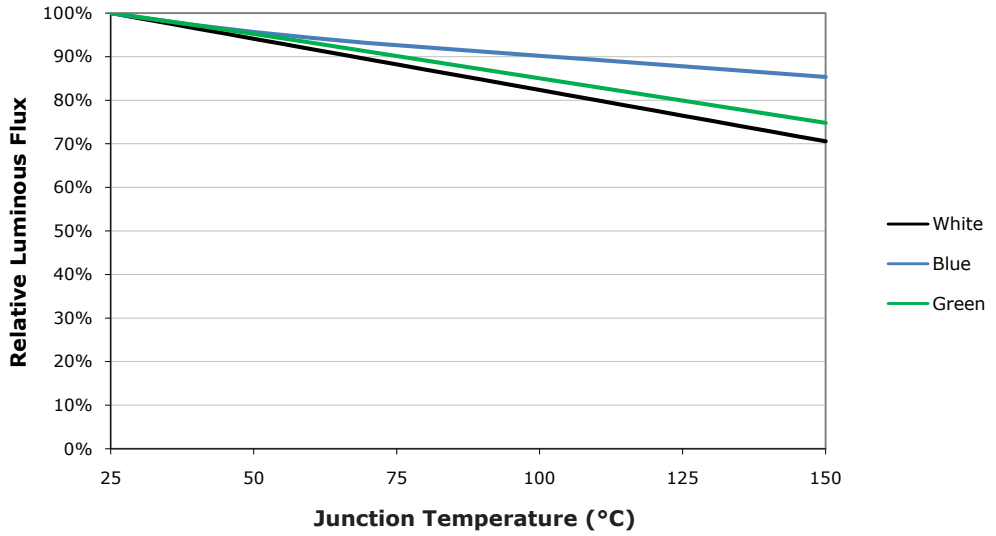

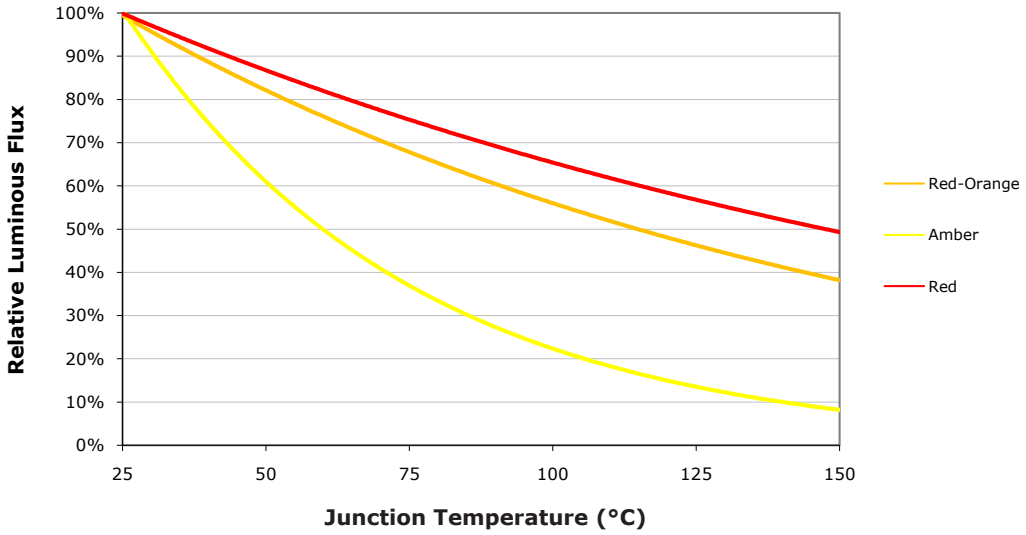

Copyright © 2008-2009 Cree, Inc. All rights reserved. The information in this document is subject to change without notice. Cree, the Cree logo and XLamp are registered trademarks of Cree, Inc.

Cree, Inc.
4600 Silicon Drive
Durham, NC 27703
USA Tel: +1.919.313.5300
www.cree.com/xlamp

Electrical Characteristics (T_J = 25°C)

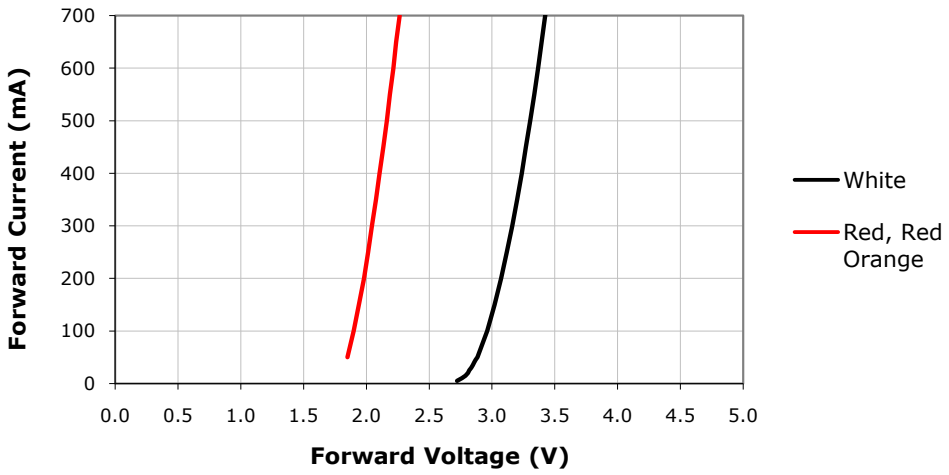

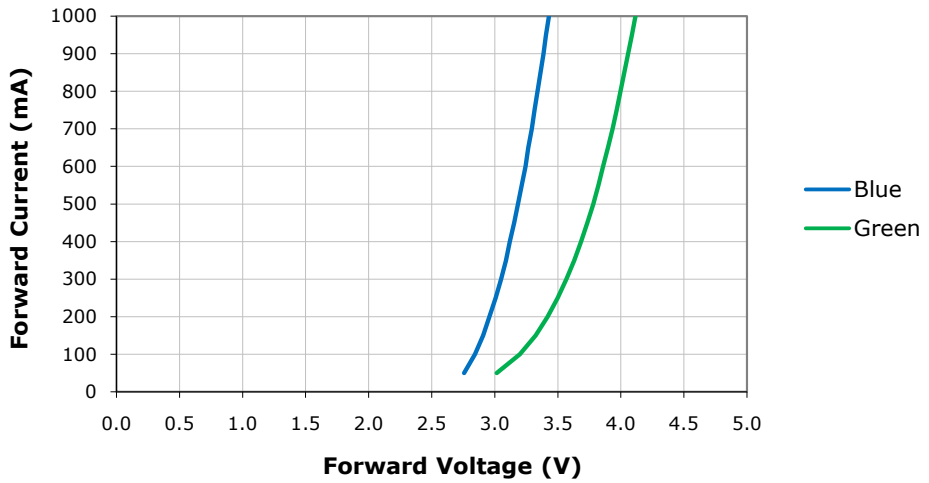

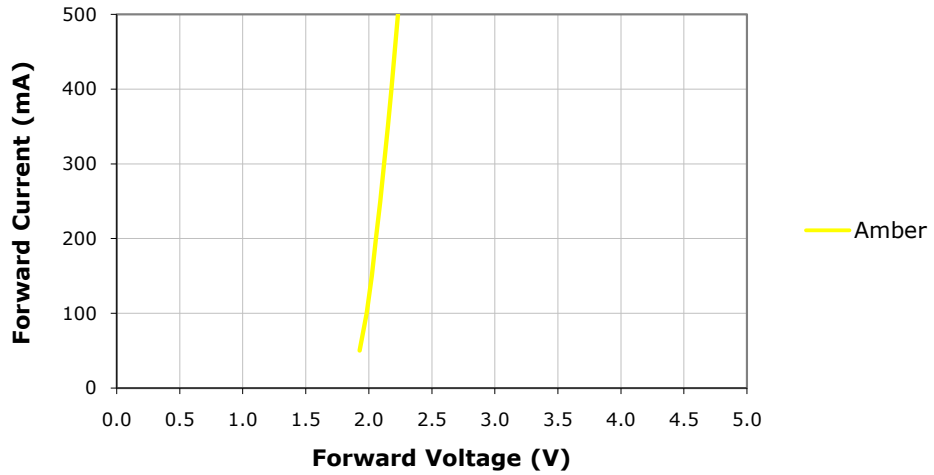

Copyright © 2008-2009 Cree, Inc. All rights reserved. The information in this document is subject to change without notice. Cree, the Cree logo and XLamp are registered trademarks of Cree, Inc.

Cree, Inc.
4600 Silicon Drive
Durham, NC 27703
USA Tel: +1.919.313.5300
www.cree.com/xlamp

Thermal Design

The maximum forward current is determined by the thermal resistance between the LED junction and ambient. It is crucial for the end product to be designed in a manner that minimizes the thermal resistance from the solder point to ambient in order to optimize lamp life and optical characteristics.

White

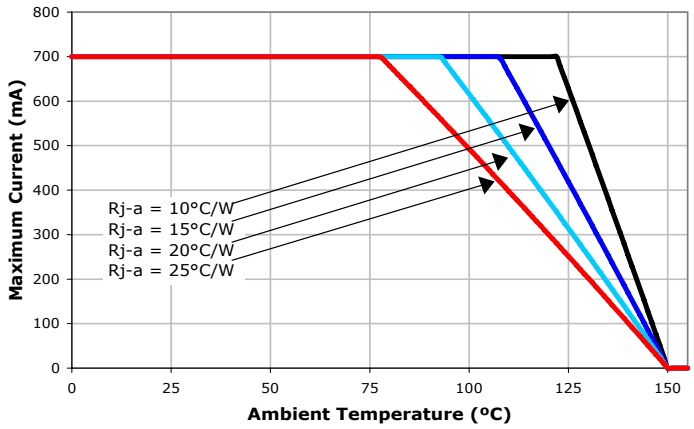

Blue

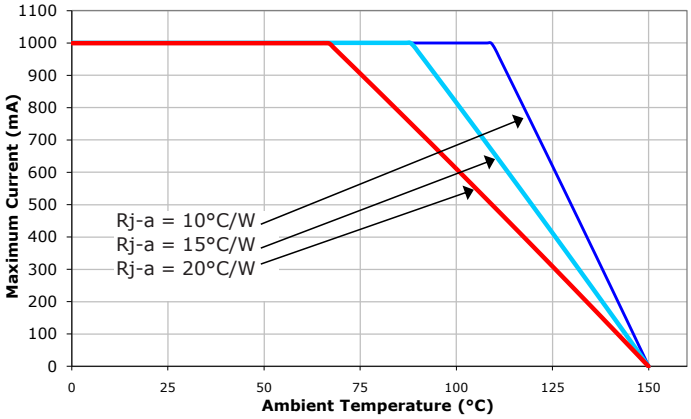

Green

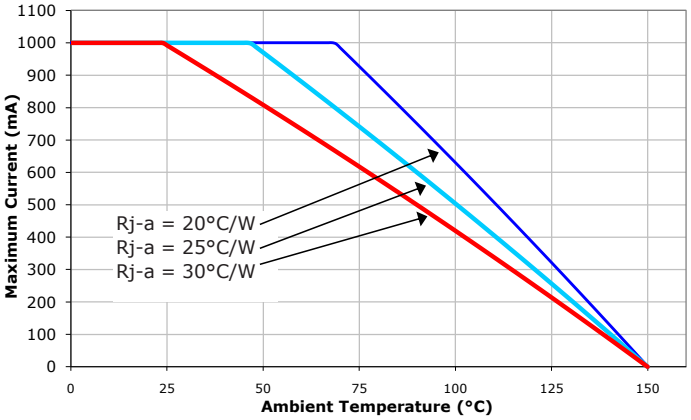

Copyright © 2008-2009 Cree, Inc. All rights reserved. The information in this document is subject to change without notice. Cree, the Cree logo and XLamp are registered trademarks of Cree, Inc.

Cree, Inc.
4600 Silicon Drive
Durham, NC 27703
USA Tel: +1.919.313.5300
www.cree.com/xlamp

Thermal Design (continued)

Red,
Red-Orange

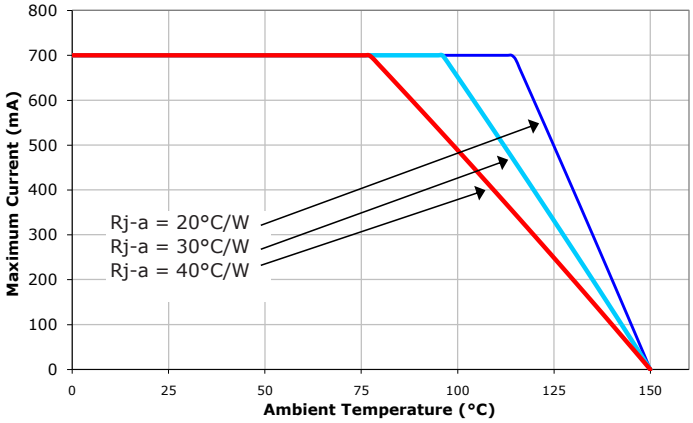

Amber

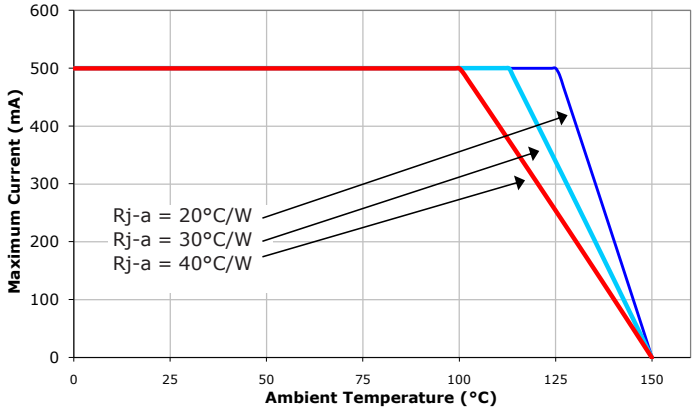

Copyright © 2008-2009 Cree, Inc. All rights reserved. The information in this document is subject to change without notice. Cree, the Cree logo and XLamp are registered trademarks of Cree, Inc.

Cree, Inc.
4600 Silicon Drive
Durham, NC 27703
USA Tel: +1.919.313.5300
www.cree.com/xlamp

Relative Flux vs. Current (T_J = 25°C)

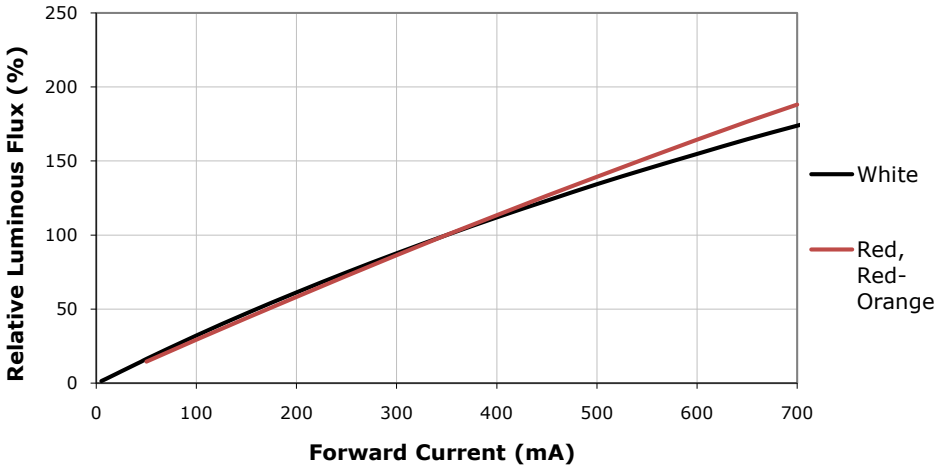

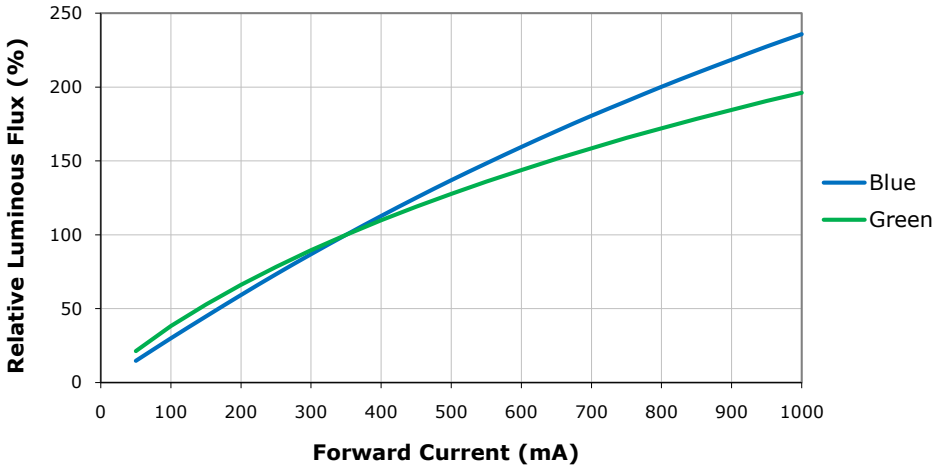

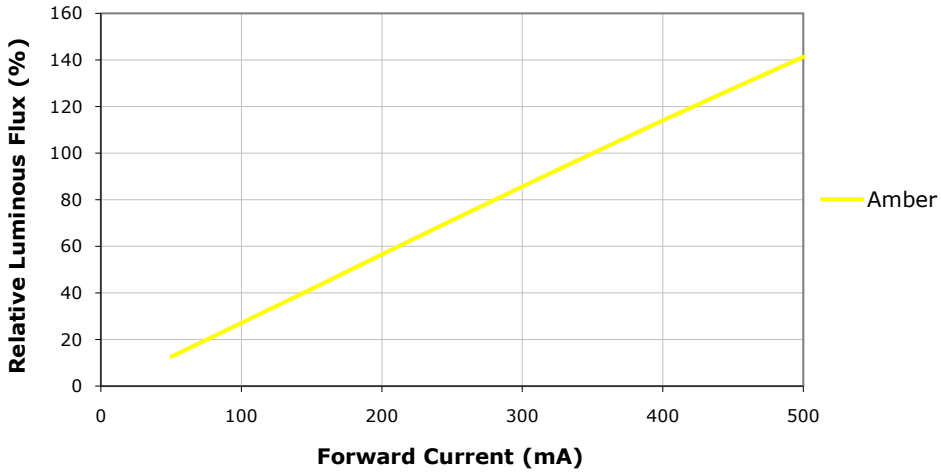

Copyright © 2008-2009 Cree, Inc. All rights reserved. The information in this document is subject to change without notice. Cree, the Cree logo and XLamp are registered trademarks of Cree, Inc.

Cree, Inc.
4600 Silicon Drive
Durham, NC 27703
USA Tel: +1.919.313.5300
www.cree.com/xlamp

Typical Spatial Distribution

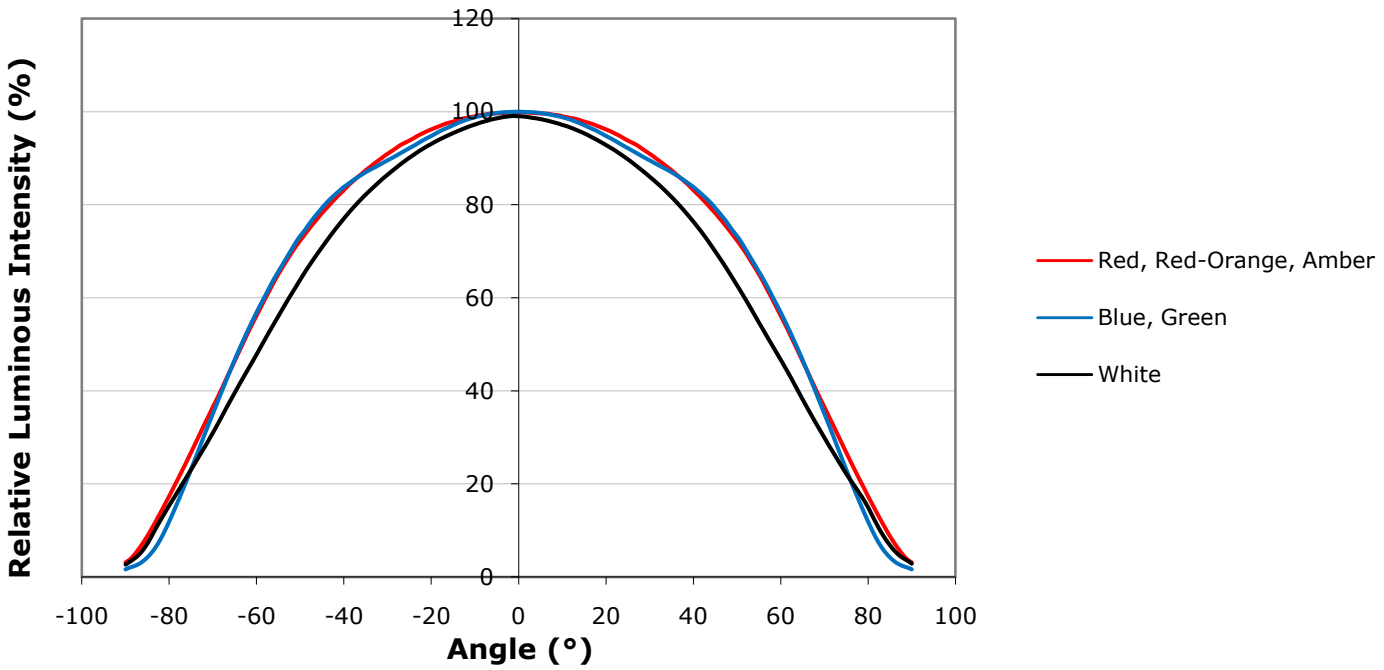

Copyright © 2008-2009 Cree, Inc. All rights reserved. The information in this document is subject to change without notice. Cree, the Cree logo and XLamp are registered trademarks of Cree, Inc.

Cree, Inc.
4600 Silicon Drive
Durham, NC 27703
USA Tel: +1.919.313.5300
www.cree.com/xlamp

Reflow Soldering Characteristics

In testing, Cree has found XLamp XP-E LEDs to be compatible with JEDEC J-STD-020C, using the parameters listed below. As a general guideline, Cree recommends that users follow the recommended soldering profile provided by the manufacturer of solder paste used.

Note that this general guideline may not apply to all PCB designs and configurations of reflow soldering equipment.

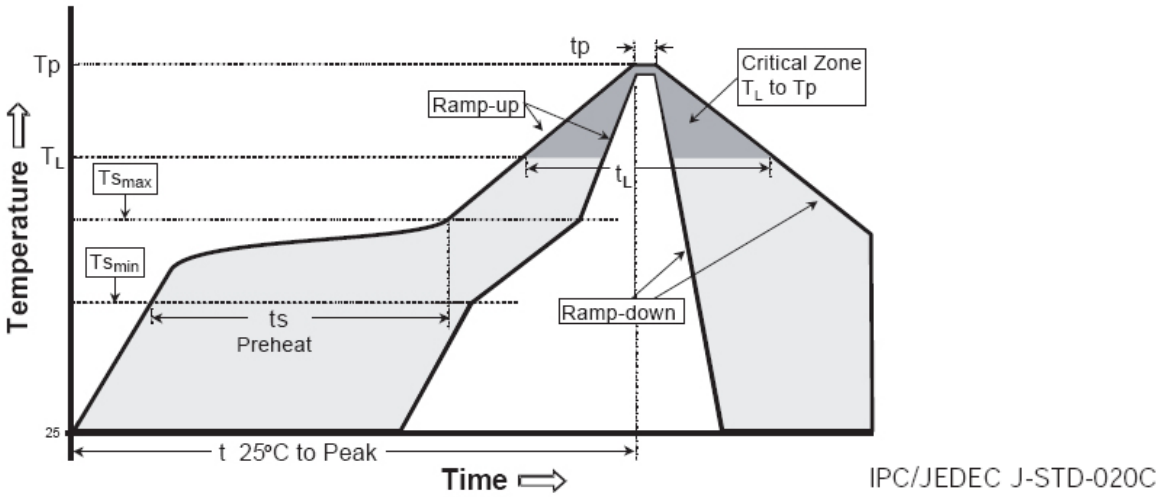

Profile Feature	Lead-Based Solder	Lead-Free Solder
Average Ramp-Up Rate (Ts_{max} to Tp)	3°C/second max.	3°C/second max.
Preheat: Temperature Min (Ts_{min})	100°C	150°C
Preheat: Temperature Max (Ts_{max})	150°C	200°C
Preheat: Time (ts_{min} to ts_{max})	60-120 seconds	60-180 seconds
Time Maintained Above: Temperature (T_L)	183°C	217°C
Time Maintained Above: Time (t_L)	60-150 seconds	60-150 seconds
Peak/Classification Temperature (Tp)	215°C	260°C
Time Within 5°C of Actual Peak Temperature (tp)	10-30 seconds	20-40 seconds
Ramp-Down Rate	6°C/second max.	6°C/second max
Time 25°C to Peak Temperature	6 minutes max.	8 minutes max.

Note: All temperatures refer to topside of the package, measured on the package body surface.

Copyright © 2008-2009 Cree, Inc. All rights reserved. The information in this document is subject to change without notice. Cree, the Cree logo and XLamp are registered trademarks of Cree, Inc.

Cree, Inc.
4600 Silicon Drive
Durham, NC 27703
USA Tel: +1.919.313.5300
www.cree.com/xlamp

Notes

Lumen Maintenance Projections

Based on internal long-term reliability testing, Cree projects white XLamp XP-E LEDs to maintain a mean 70% lumen maintenance after 50,000 hours, provided the LED junction temperature is maintained at or below 90°C and ambient air temperature is maintained at or below 85°C.

Please read the XLamp Long-Term Lumen Maintenance application note for more details on Cree's lumen maintenance testing and forecasting. Please read the XLamp Thermal Management application note for details on how thermal design, ambient temperature, and drive current affect the LED junction temperature.

Moisture Sensitivity

In testing, Cree has found XLamp XP-C & XP-E LEDs to have unlimited floor life in conditions ≤30ºC / 85% relative humidity (RH). Moisture testing included a 168 hour soak at 85ºC / 85% RH followed by 3 reflow cycles, with visual and electrical inspections at each stage.

RoHS Compliance

The levels of environmentally sensitive, persistent biologically toxic (PBT), persistent organic pollutants (POP), or otherwise restricted materials in this product are below the maximum concentration values (also referred to as the threshold limits) permitted for such substances, or are used in an exempted application, in accordance with EU Directive 2002/95/EC on the restriction of the use of certain hazardous substances in electrical and electronic equipment (RoHS), as amended through April 21, 2006.

Vision Advisory Claim

Users should be cautioned not to stare at the light of this LED product. The bright light can damage the eye.

Copyright © 2008-2009 Cree, Inc. All rights reserved. The information in this document is subject to change without notice. Cree, the Cree logo and XLamp are registered trademarks of Cree, Inc.

Cree, Inc.
4600 Silicon Drive
Durham, NC 27703
USA Tel: +1.919.313.5300
www.cree.com/xlamp

Mechanical Dimensions (T_A = 25°C)

All measurements are ±.13 mm unless otherwise indicated.

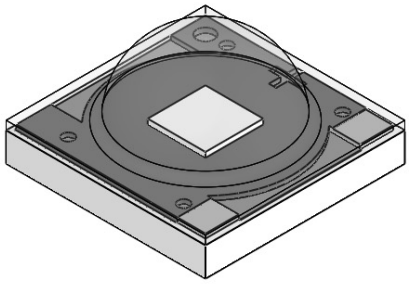

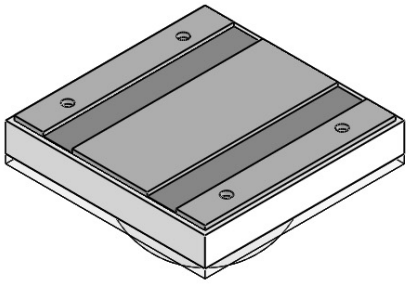

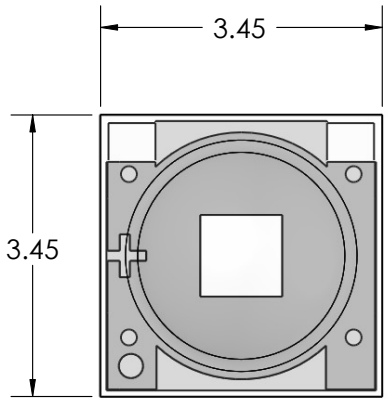

Top View

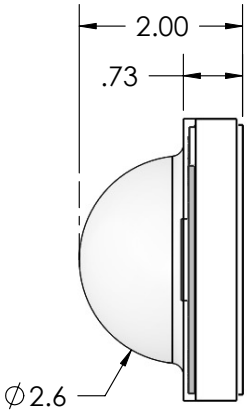

Side View

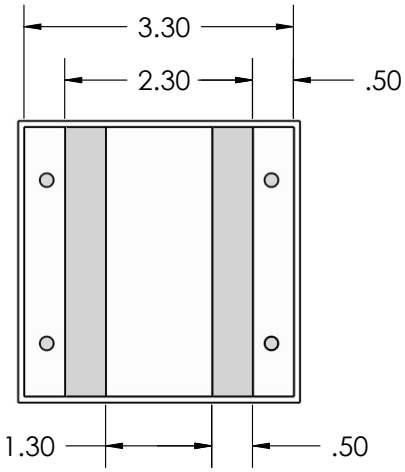

Bottom View

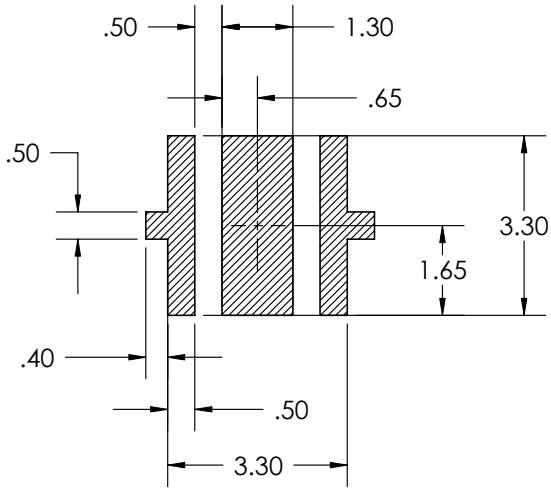

RECOMMENDED PCB SOLDER PAD

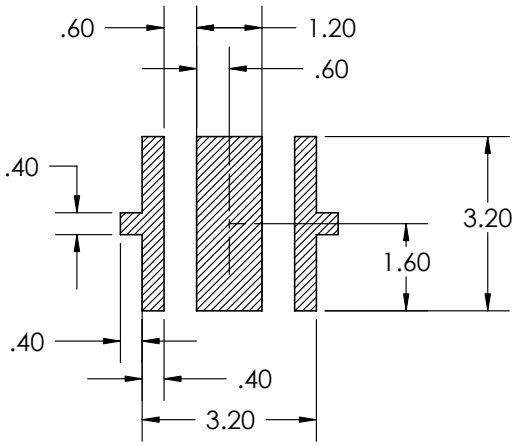

RECOMMENDED STENCIL PATTERN (HATCHED AREA IS OPENING)

Copyright © 2008-2009 Cree, Inc. All rights reserved. The information in this document is subject to change without notice. Cree, the Cree logo and XLamp are registered trademarks of Cree, Inc.

Cree, Inc.
4600 Silicon Drive
Durham, NC 27703
USA Tel: +1.919.313.5300
www.cree.com/xlamp

Tape and Reel

All dimensions in mm.

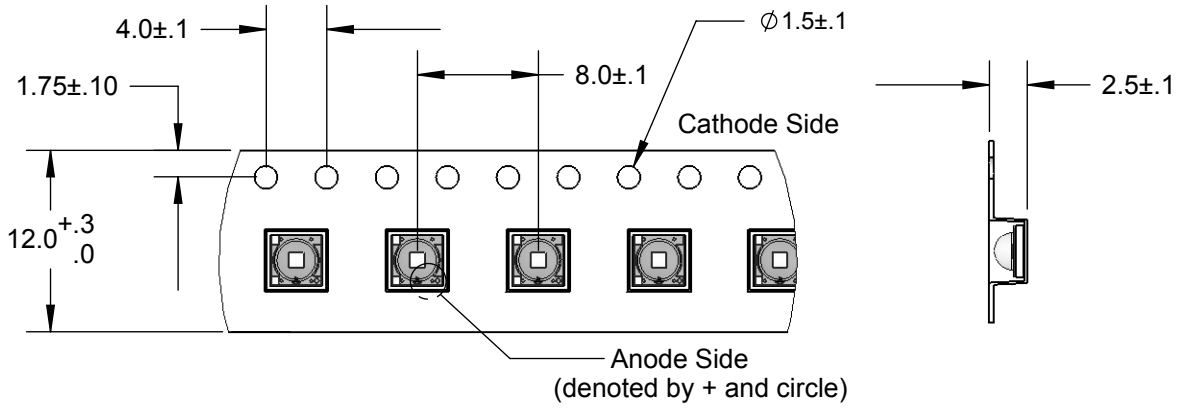

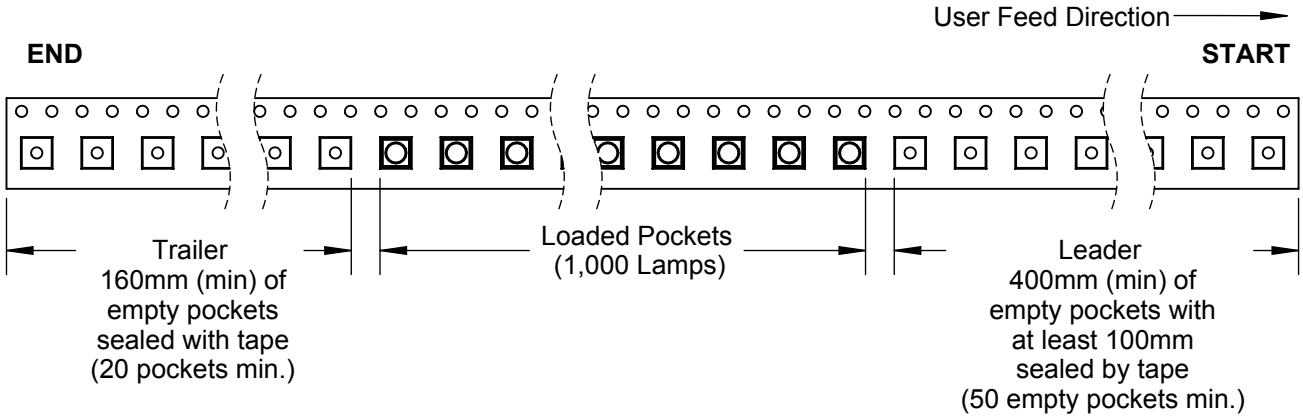

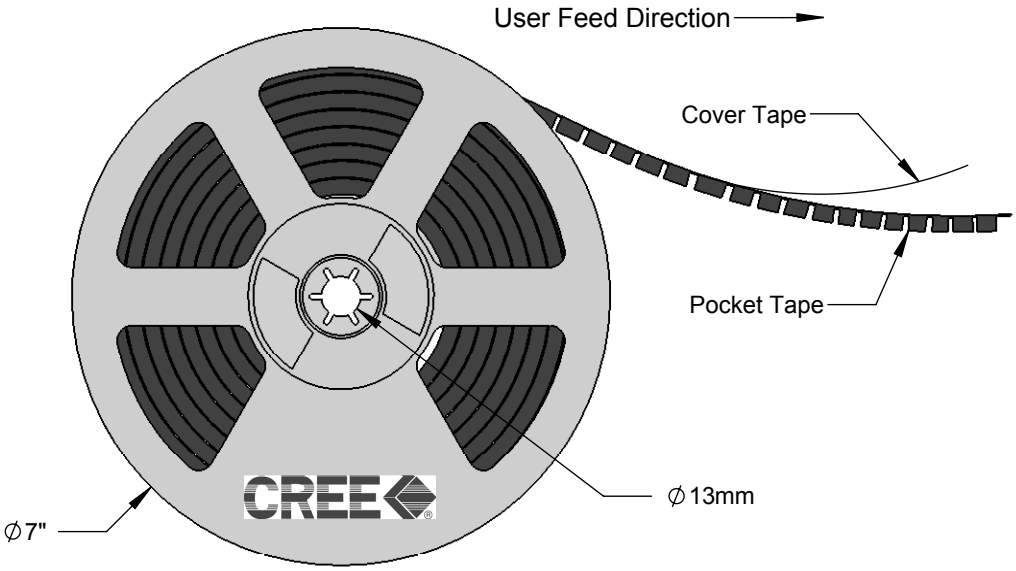

Copyright © 2008-2009 Cree, Inc. All rights reserved. The information in this document is subject to change without notice. Cree, the Cree logo and XLamp are registered trademarks of Cree, Inc.

Cree, Inc.
4600 Silicon Drive
Durham, NC 27703
USA Tel: +1.919.313.5300
www.cree.com/xlamp

Packaging

All dimensions in mm.

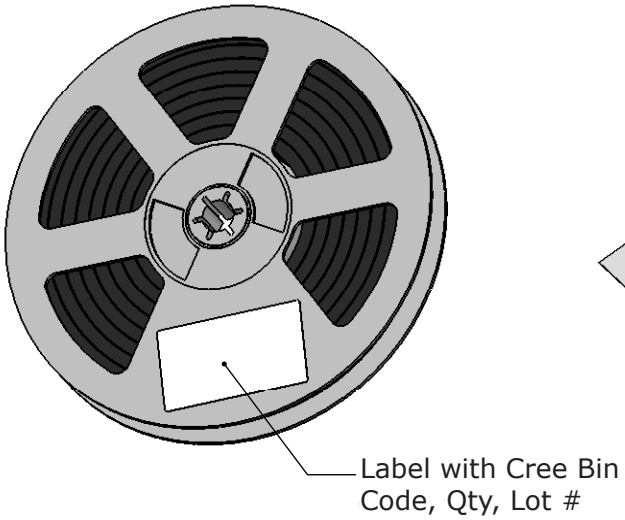

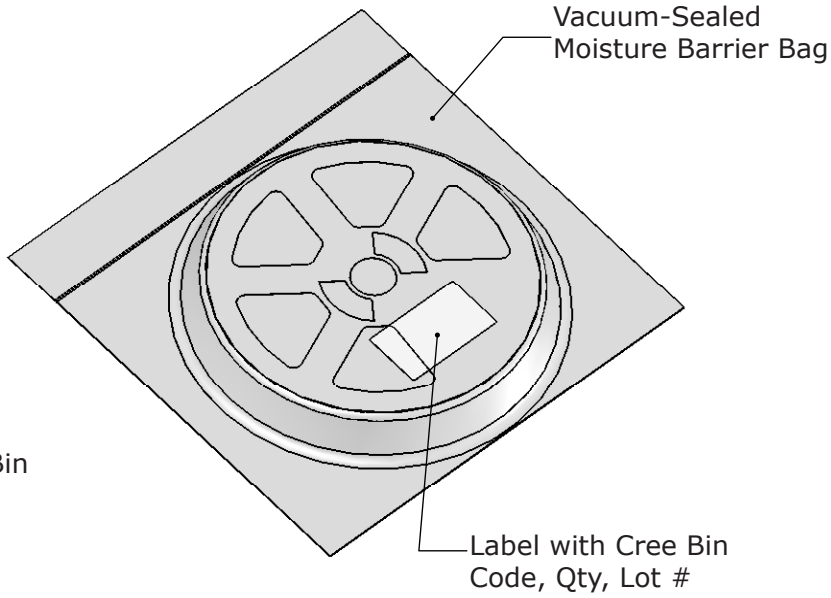

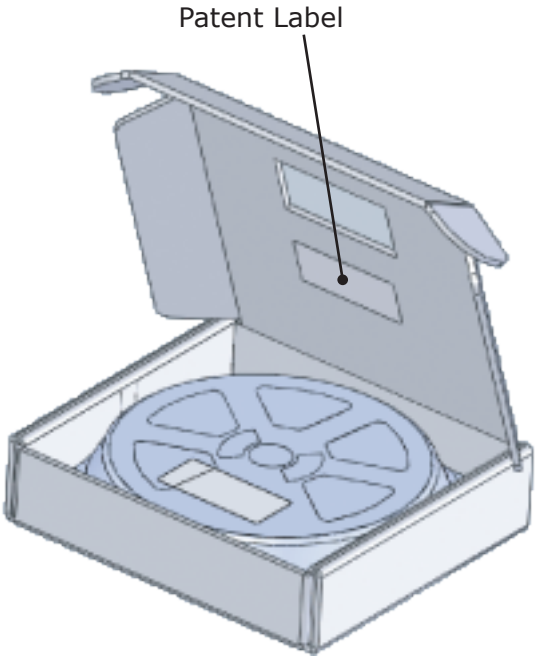

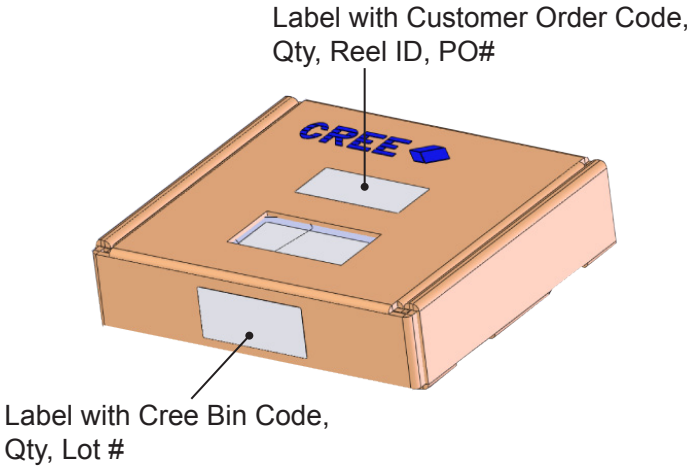

Copyright © 2008-2009 Cree, Inc. All rights reserved. The information in this document is subject to change without notice. Cree, the Cree logo and XLamp are registered trademarks of Cree, Inc.

Cree, Inc.
4600 Silicon Drive
Durham, NC 27703
USA Tel: +1.919.313.5300
www.cree.com/xlamp