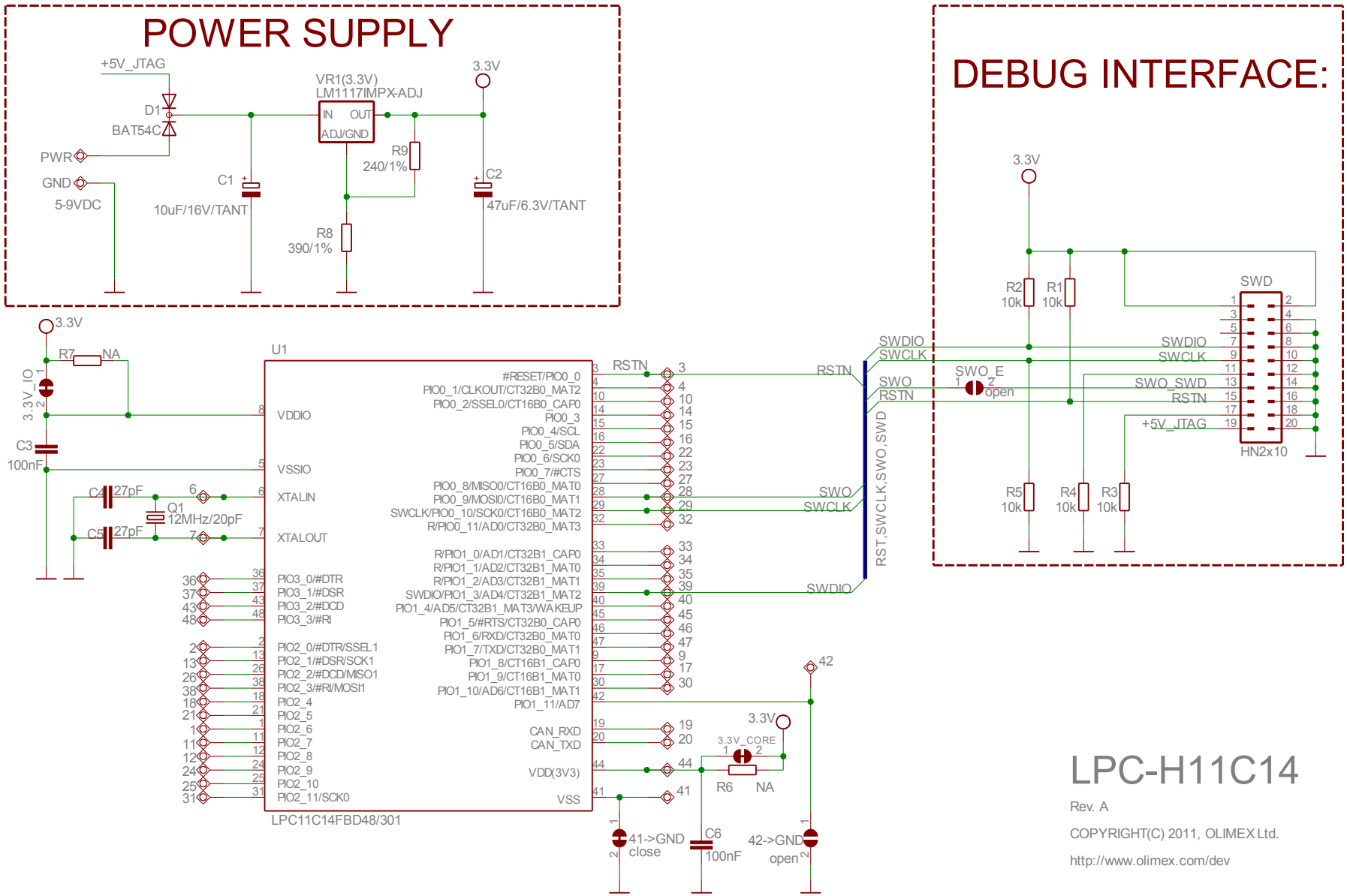
POWER SUPPLY
+5V_JTAG
D1
BAT54C
PWR
GND
5-9VDC
C1
10uF/16V/TANT
VR1(3.3V)
LM1117IMPX-ADJ
IN
OUT
ADJ/GND
R9
240/1%
R8
390/1%
3.3V
C2
47uF/6.3V/TANT
DEBUG INTERFACE:
3.3V
R2
10k
R1
10k
SWD
SWDIO
SWCLK
SWO_E
open
SWO_SWD
RSTN
+5V_JTAG
HN2x10
R5
10k
R4
10k
R3
10k
3.3V
R7
NA
3.3V_IO
C3
100nF
U1
C4
27pF
C5
27pF
Q1
12MHz/20pF
VDDIO
VSSIO
XTALIN
XTALOUT
PIO3_0/#DTR
PIO3_1/#DSR
PIO3_2/#DCD
PIO3_3/#RI
PIO2_0/#DTR/SSEL1
PIO2_1/#DSR/SCK1
PIO2_2/#DCD/MISO1
PIO2_3/#RI/MOSI1
PIO2_4
PIO2_5
PIO2_6
PIO2_7
PIO2_8
PIO2_9
PIO2_10
PIO2_11/SCK0
#RESET/PIO0_0
PIO0_1/CLKOUT/CT32B0_MAT2
PIO0_2/SSEL0/CT16B0_CAP0
PIO0_3
PIO0_4/SCL
PIO0_5/SDA
PIO0_6/SCK0
PIO0_7/#CTS
PIO0_8/MISO0/CT16B0_MAT0
PIO0_9/MOSI0/CT16B0_MAT1
SWCLK/PIO0_10/SCK0/CT16B0_MAT2
R/PIO0_11/AD0/CT32B0_MAT3
R/PIO1_0/AD1/CT32B1_CAP0
R/PIO1_1/AD2/CT32B1_MAT0
R/PIO1_2/AD3/CT32B1_MAT1
SWDIO/PIO1_3/AD4/CT32B1_MAT2
PIO1_4/AD5/CT32B1_MAT3/WAKEUP
PIO1_5/#RTS/CT32B0_CAP0
PIO1_6/RXD/CT32B0_MAT0
PIO1_7/TXD/CT32B0_MAT1
PIO1_8/CT16B1_CAP0
PIO1_9/CT16B1_MAT0
PIO1_10/AD6/CT16B1_MAT1
PIO1_11/AD7
CAN_RXD
CAN_TXD
VDD(3V3)
VSS
LPC11C14FBD48/301
RSTN
SWO
SWCLK
SWDIO
RST,SWCLK,SWO,SWD
3.3V_CORE
R6
NA
41->GND
close
C6
100nF
42->GND
open
LPC-H11C14
Rev. A
COPYRIGHT(C) 2011, OLIMEX Ltd.
http://www.olimex.com/dev